PV SURGE ARRESTERS - CLASS I+II
PV60/1500-MVCDR

T1+T2 (IEC/EN) Surge Protective Device (SPDs) are designed for PV/Photovoltaic system dc-side protection against the damaging from surges and spikes caused by lightning and other electrical sources.

- T1+T2 PV SPD per IEC 61643-31/EN50539-11
- Compact size design (18mm) due to high energy MOV inside
- Prewired Y protection circuit, for common mode and differential mode protection
- Pluggable module for easy replacement
- Surge capacity 60kA 8/20μs per pole
- Lightning impulse current 7kA 10/350μs per pole
- Degradation indication and optional alarm signal optional

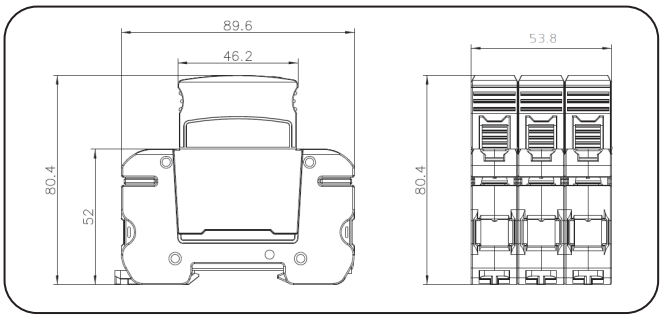

Dimension drawing

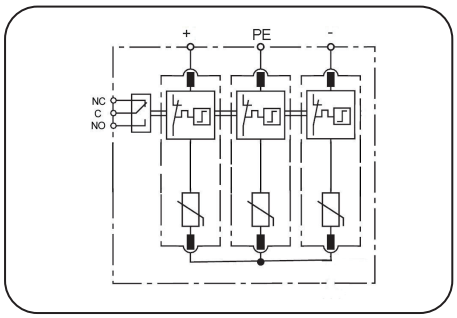

Basic circuit diagram

Type		PV60/1500-MVCDR
In accordance with		EN50539-11; IEC61643-31
Category IEC/VDE		I+II/B+C
Protection Mode		Common mode & Differential mode
Max. continuous operating voltage	Ucpv	1500Vdc
Nominal discharge current(8/20μs)	In	30kA
Max. discharge current(8/20μs)	Imax	60kA
Lightning impulse current (10/350μs) per pole	Iimp	7.0kA
Total Discharge Current (10/350us)	Itotal (10/350)	15kA
Voltage protection rating	Up	<6.0kV
Response time		≤25 ns
Short circuit withstand capacity (Iscpv)		1000A
Operating temperature range		- 40°C ~ + 85°C
Cross-section of connection wire		Single-strand 35mm^2 ; multi-strand 25mm^2
Mounting		35mm DIN-rail in accordance with EN 50022/DIN46277-3
Enclosure material		thermoplastic; extinguishing degree UL94 V-0
Degree of protection		IP20
Installation width		3 modules, DIN 43880
Thermal disconnector		Internal green – normal ; red - failure
Remote alarm contact		Yes
Additional data for Remote Alarm Contacts		
Remote alarm contact type		Isolated Form C
Switching capability Un/In		AC: 250V/0.5A DC: 250V/0.1A; 125V/0.2A; 75V/0.5A
Max. Size of connecting wire		Max. 1.5mm2(or # 16AWG)