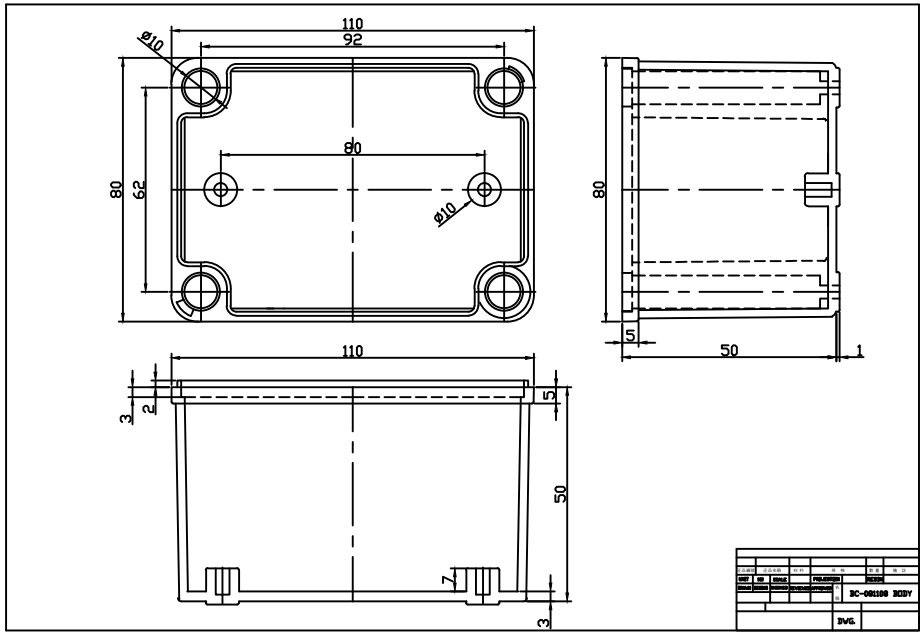
110
92
ø10
80
62
80
ø10
80
5
50
1
110
3
2
5
50
7
3
BC-001100 BODY
DWG.

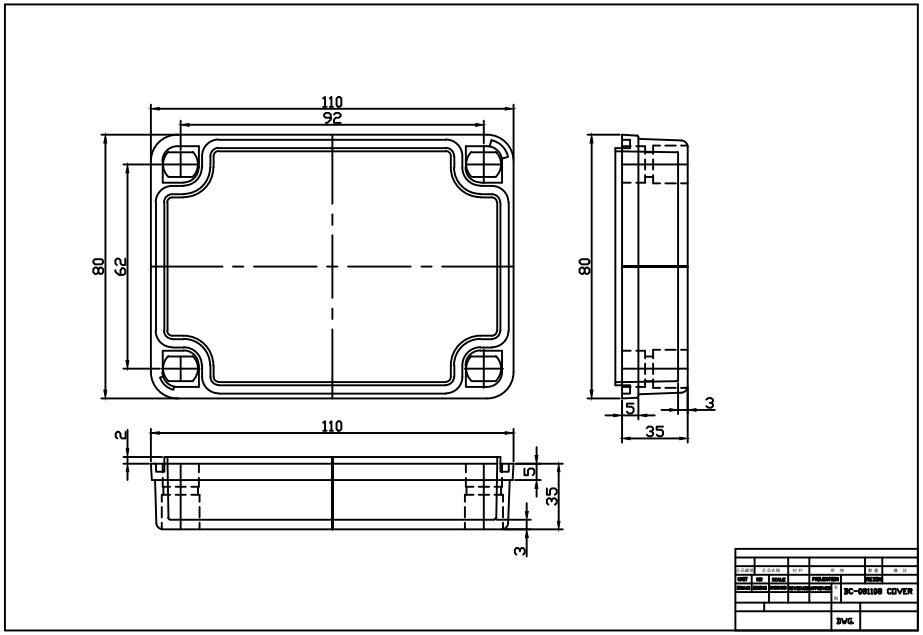
110
92
80
62
80
5
3
35
2
110
5
35
3
BC-001100 COVER
DWG.