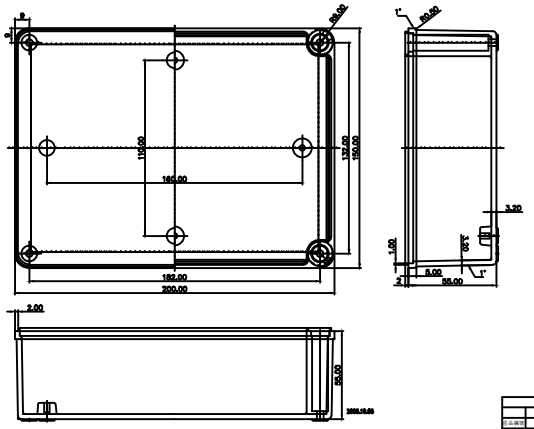
9
9
29.00
137.00
150.00
110.00
160.00
182.00
200.00
2.00
25.00
20.00
3.20
1.00
3.50
5.00
55.00
UNIT
MM
SCALE
PROJECTION
REGIN
DRAWN
DESIGN
CHECKED
REVIEWED
APPROVED
1520 BODY
DWG.

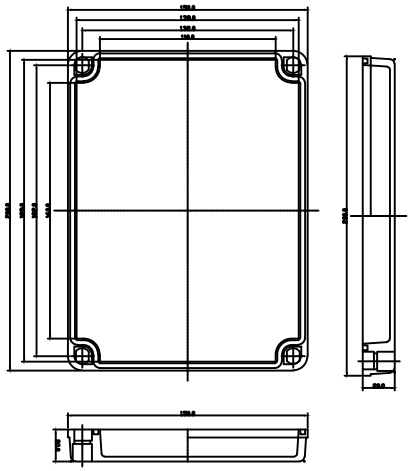
UNIT
MM
SCALE
PROJECTION
REGIN
DRAWN
DESIGN
CHECKED
REVIEWED
APPROVED
1520 COVER
DWG.