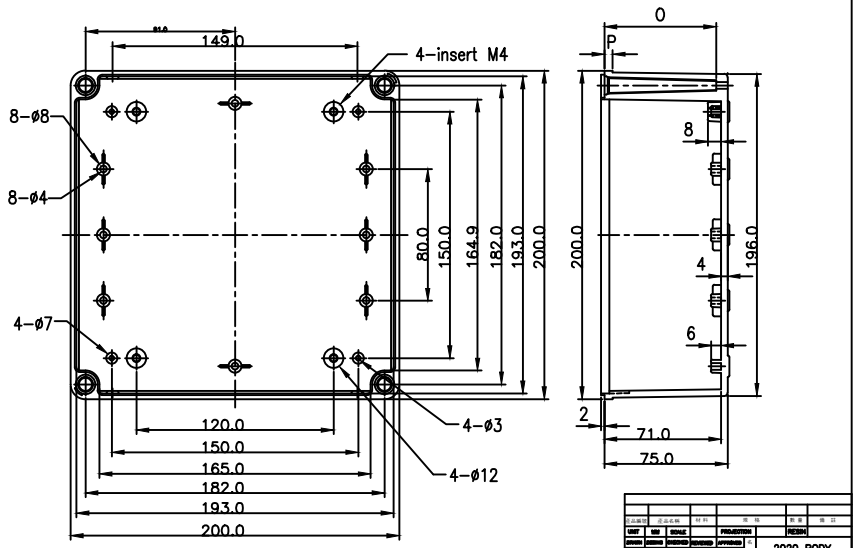
149.0
4-insert M4
8-ø8
8-ø4
4-ø7
80.0
150.0
164.9
182.0
193.0
200.0
120.0
150.0
165.0
182.0
193.0
200.0
4-ø3
4-ø12
0
P
8
4
6
2
200.0
196.0
71.0
75.0
2020 BODY
DWG.

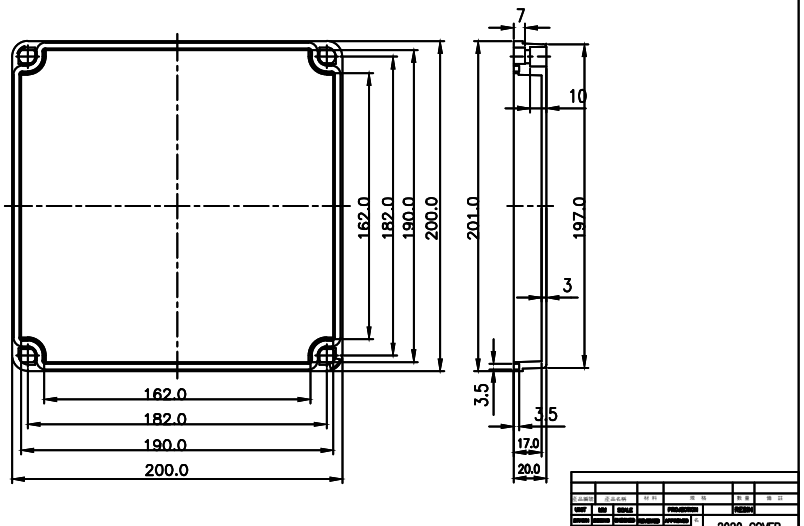
162.0
182.0
190.0
200.0
7
10
201.0
197.0
3
3.5
3.5
17.0
20.0
2020 COVER
DWG.